Digital Maestro
magazine

3D Cars in Motion

Design and print a rubber band powered car

Reinforce geometry concepts

Apply science concepts

digitalmaestro.org

September 15, 2018

Supporting educators in STEM integration

Table of Contents

Introduction

The goal of 3D printers in the classroom should be to apply classroom concepts. In this issue we dive into the creation of a product. This product reinforces math skills in geometry. The finished product allows students to apply basic science concepts. These concepts include mass, velocity, and acceleration.

Projects are often left out of the regular classroom routine and lesson plans. Projects are long and complex. There isn't always time to complete a project. This doesn't mean we shouldn't attempt to work on projects. At the end of the lessons I include a lesson breakdown. This is a guideline I would use with my students. The lesson plan guides are paced for 45 minute lessons. Use this issue with students. Have them follow the instructions.

Motion Physics and Cars

Students will develop a car using TinkerCAD. Students will learn a variety of skills. They will use TinkerCAD to form new shapes. Shapes are formed when two or more geometric shapes are combined. New shapes are also formed when one shape is used to remove material from another. The steps in the development of this car are intricate. I have tried to simplify them whenever possible. To simplify steps I have taken alternate paths to explain steps. Many of the steps are repeated in the lessons. This is by design. Practicing skills helps to develop a memory for using those skills. Some steps are repeated in different contexts.

Designing the Car

Students will use traditional methods to design the car. They will use paper, pencil, and a template. The template is available for teachers to print and share with students. The template is based on the model developed in these lessons. A link to the template is available on the website http://digitalmaestro.org.

STEM Integration

Use the model to reinforce math and science concepts. Review mass, motion, and acceleration. Review the concept of velocity and how it differs from acceleration.

The development of the model uses a variety of shapes. These shapes include cylinders, cubes, and rectangular prisms. Take the time to review basic concepts related to these shapes. Some of these concepts include radius, diameter, area, and volume.

The model will use a rubber band to apply the needed force for acceleration. The rubber band supplies potential and kinetic energy. It is used to demonstrate the storage and release of energy.

The Design

The design of the chassis and wheels is modular. The chassis is designed in two parts. Each part is designed to fit within the other. This design is necessary to work within the limitations of fused deposition. Printers cannot deposit filament without a surface or support structure. The design of the chassis uses the printer bed to support the structure from start to finish. The same holds true for the wheels and axle.

The chassis has holes to accommodate the wheel axles. The axles are designed to join together. The wheels used for the front of the car use a square dowel. This supports the joining of the pieces and provides strength. The rear wheels are joined with a similar dowel. This dowel extends out of the axle. The extension is used by the rubber band for leverage. This leverage is very much like a lever. The other end of a rubber band is connected to one of the rods that connect the chassis halves together.

Traction

The printed wheels are plastic and do not provide good friction. I found the use of friction tape to be very useful. There is a link on the website for a link to the type of friction tape used in my project.

The Chassis

Go over to tinkered.com. Create a free account if you don't already have one. If you are an educator I recommend reading my issue on 3D design and printing for the classroom. The issue walks you through the process of creating a teacher account. It also walks you through the process of creating student accounts.

Children under 13 years of age cannot create an account of their own. A teacher account in Tinkercad allows you to create an account for young students.

Create a new design by clicking the Create new design button.

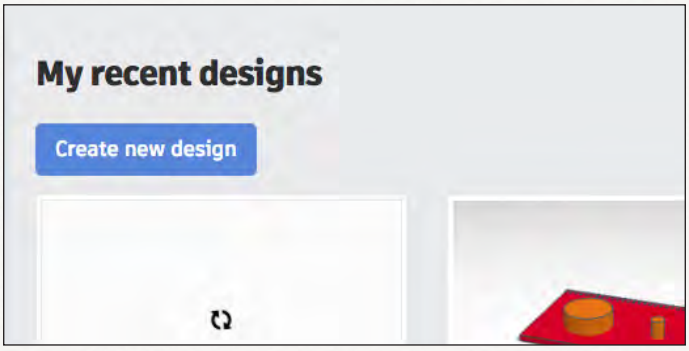

The generic name for the project is shown next to the Tinkercad icon. Change the name of the project to Chassis. Click once on the generic name to change it.

Click the Ruler tool. The tool is located on the top right panel.

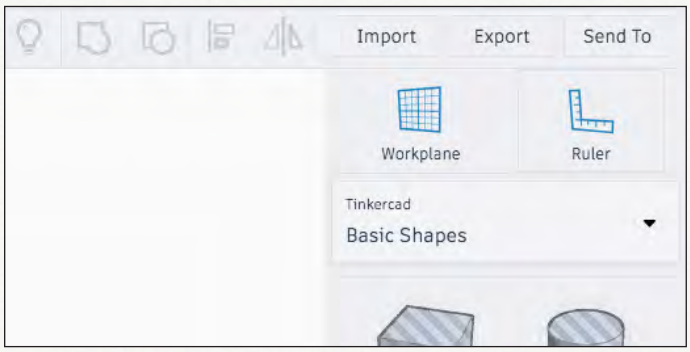

Place the corner of the ruler four centimeters from the lower left corner. This is four centimeters on the x-axis. Place it four centimeters on the y-axis too.

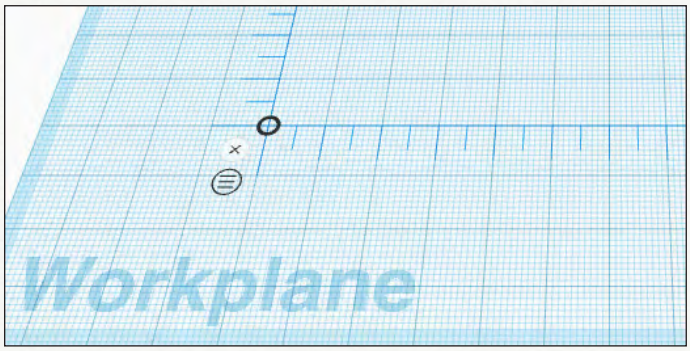

My instructions are going to be precise. The placement of rulers and other objects will also be precise. Click the box shape and place it on the Worplane. It doesn't have to be aligned with the ruler yet.

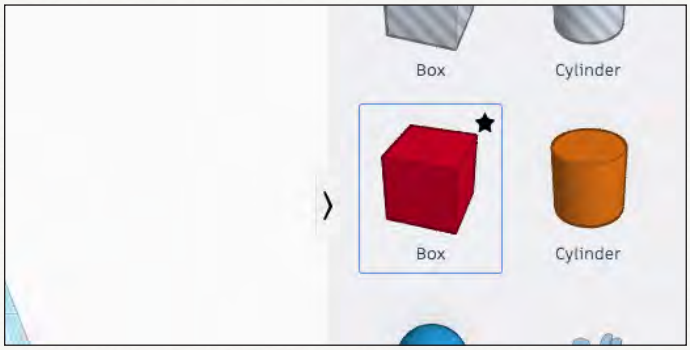

Change the height of the cube to 5 millimeters (.5 centimeter).

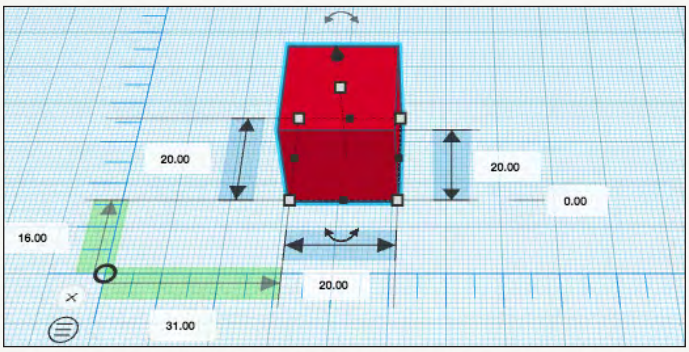

Change the length to 120 millimeters (12 centimeters). This new shape is called a rectangular prism. It is also called a cuboid.

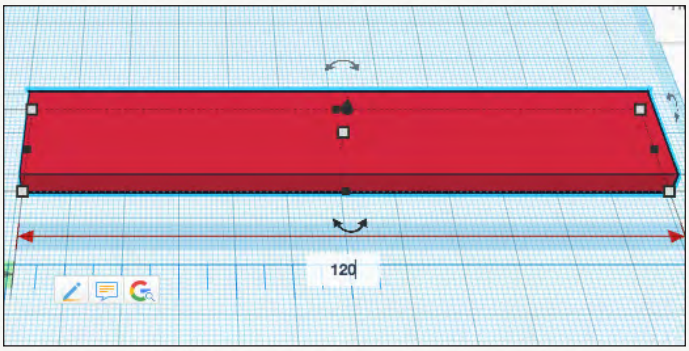

Select the cylinder shape from the shapes panel. Place it above the cuboid.

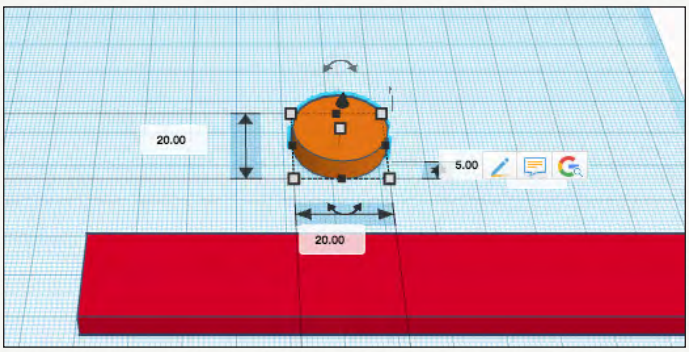

Change the height of the cylinder to 5 mm (.5 cm).

Move the cylinder so the left and bottom edges align with the ruler.

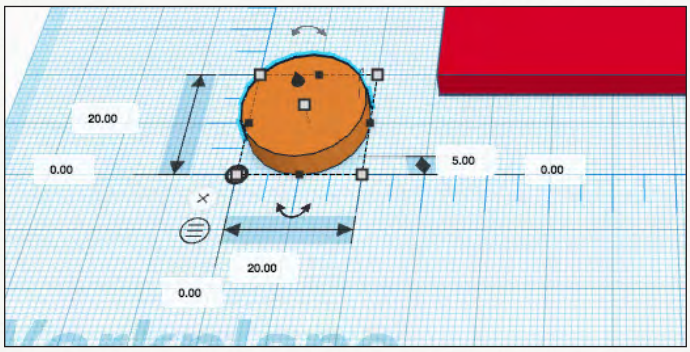

Move the rectangular prism to the bottom. Make sure it aligns to the edge of the bottom ruler. This is the ruler along the x-axis.

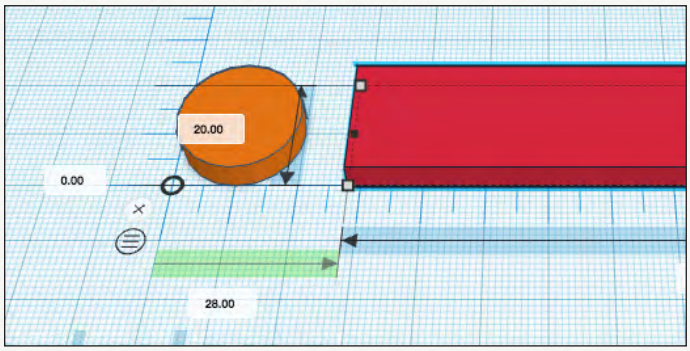

In my example, the rectangular prism is 28 mm away from the edge of the y-axis. Yours might be different. Click once inside the value. Change the value to 10 mm. The left edge of the rectangular prism will rest half way into the cylinder.

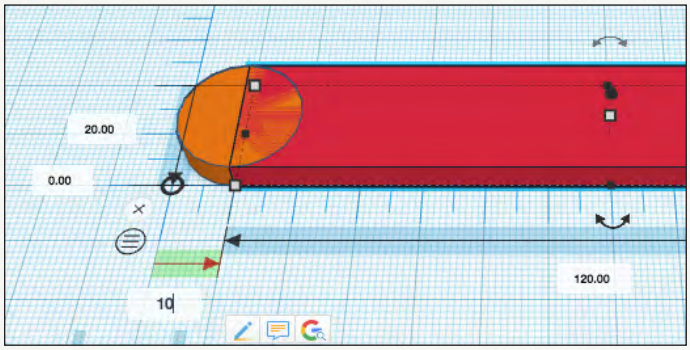

We are going to duplicate the cylinder. We will place the duplicate on the other side of the rectangular prism. Click once on the cylinder.

Click the duplicate button in the button bar. The duplicate button is below the project name.

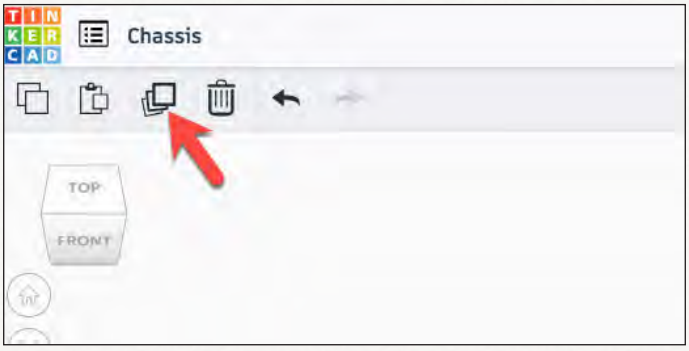

The duplicate will be placed right above the original. Nothing will look different. Click once on the distance value along the x-axis.

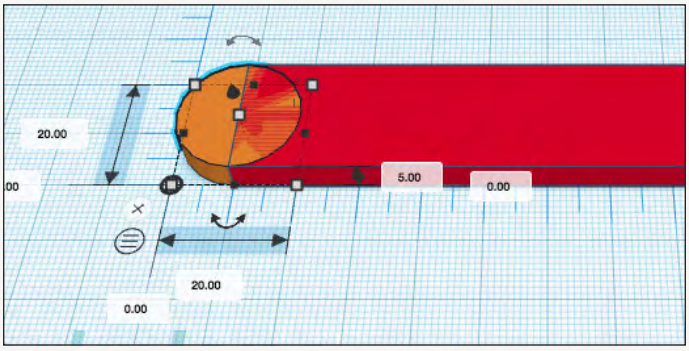

Enter a value of 120. The shape will move to the opposite end of the rectangular prism. The position of the object is set relative to the edge of each shape. The cylinder we just moved is 120mm from the left edge of the cylinder.

We will merge the shapes to form one piece. Before merging the shapes, we need to smooth the edges. Smoothing shapes will assure the printed piece will be smooth too. Click on the cylinder on the right.

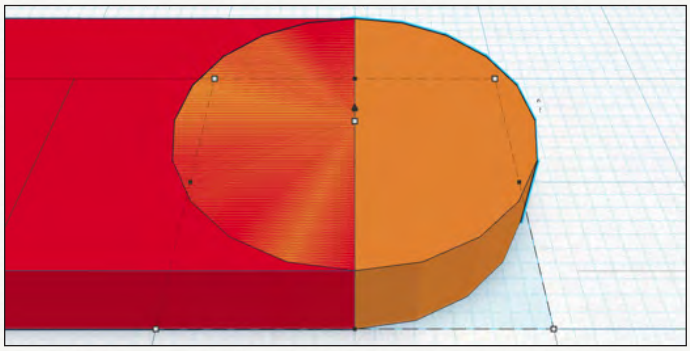

Move the Sides slider all the way to the right. The maximum value is 64.

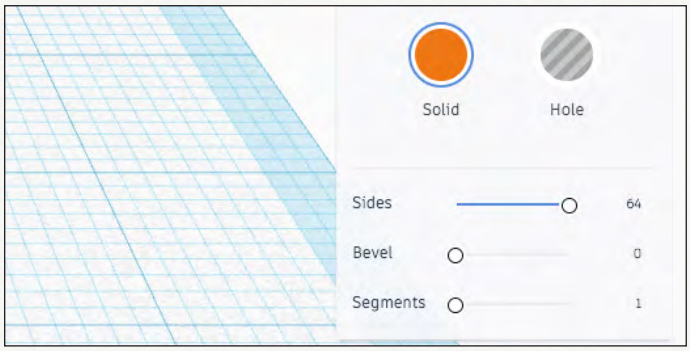

The shape of the workplace updates to represent the changes. Repeat the process for the cylinder on the left.

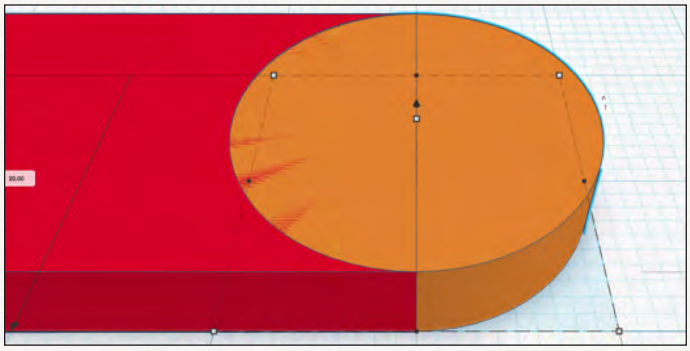

Click once on the rectangular prism. Move the steps slider all the way to the right.

Click and drag a selection box around the entire shape.

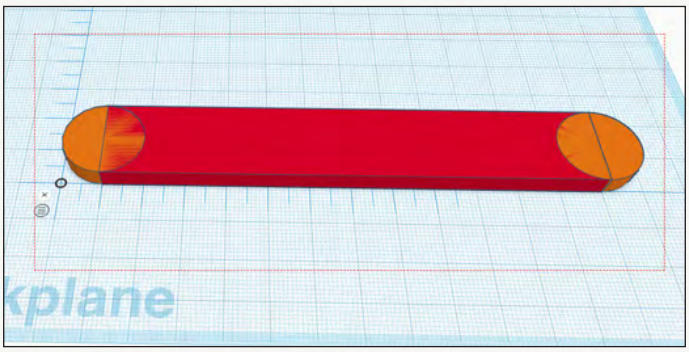

Click the Group button in the button bar.

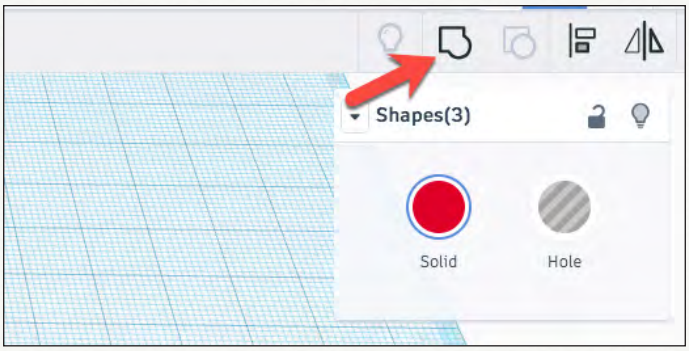

We need to duplicate this shape for the other side of the chassis. Click once on the grouped shape and click the duplicate button. Move the duplicate shape up and above the original. Make sure both are aligned to the left edge of the ruler.

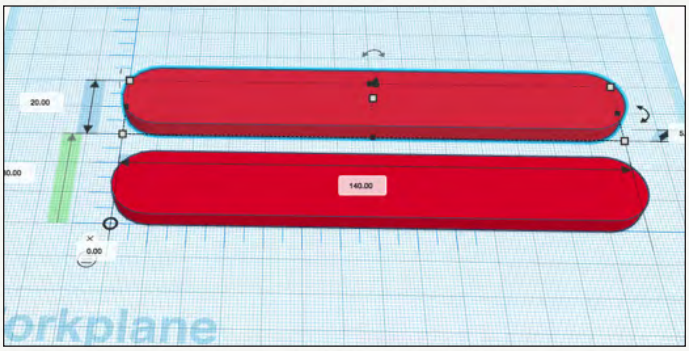

Digital Maestro Magazine

Thank you for reading these sample pages.

Purchase the full issue at…

digitalmaestro.org/shop

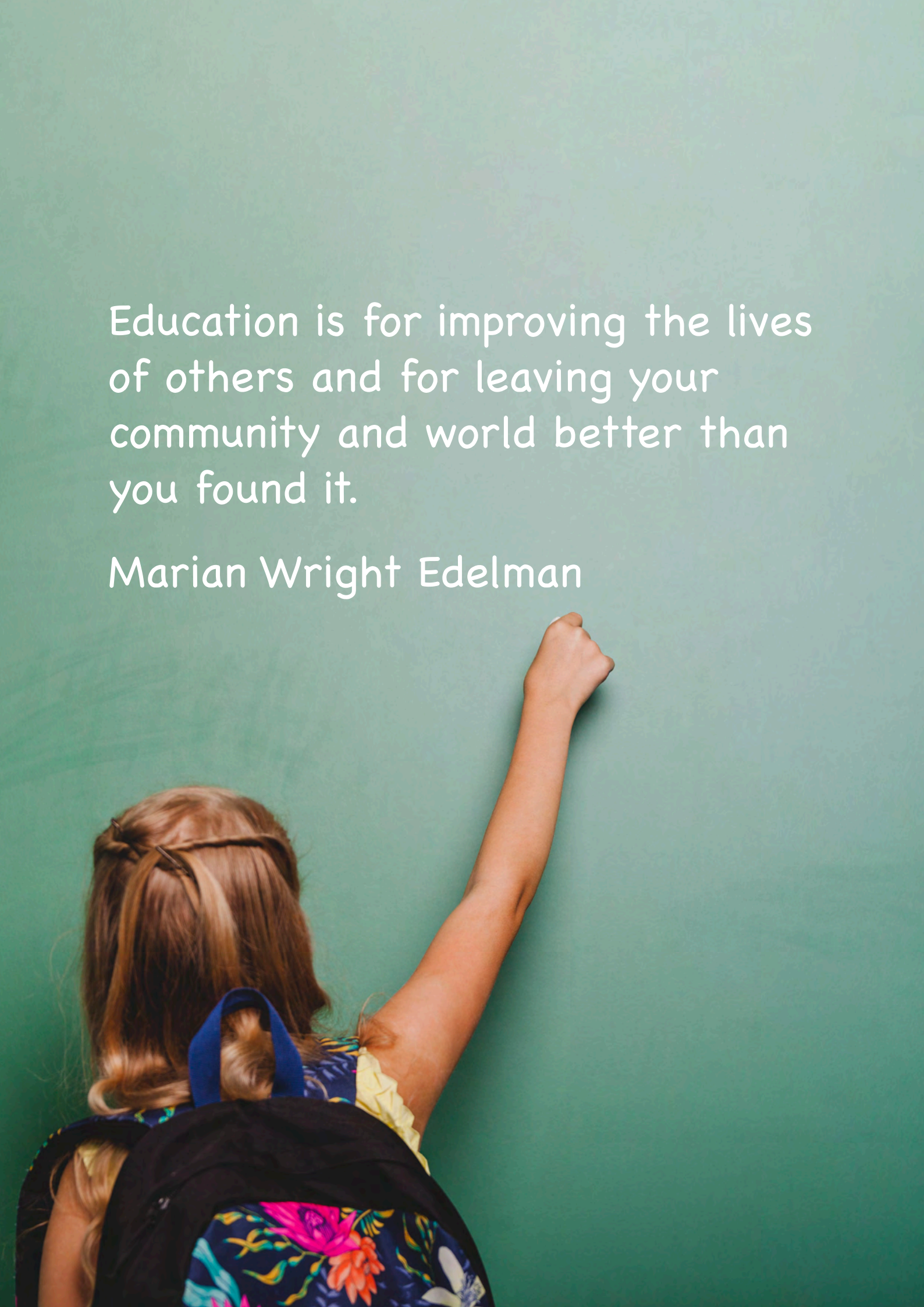
Education is for improving the lives of others and for leaving your community and world better than you found it.
Marian Wright Edelman